PUSH BUTTON CANOPY SWITCH
(Two Circuit)

Mounting Hole: 0.406”

SPECIFICATIONS:

Current Rating:	6A @ 125V AC, 3A @ 250V AC
Initial Contact Resistance:	DC 2.5V-1A, 20 Meg ohm (Min.)
Insulation Resistance:	500V DC 100 Meg ohm (Min.)
Dielectric Strength:	1500V AC for 1 minute
Contact Material:	Brass - Bright Nickel Plate
Terminal Material:	6” 18 AWG 105 C° Wire
Terminal Type:	Stripped Wire Leads

Part No.	Replaces	Type	Action	Actuator
30-1887	1887	Two Circuit	3-Way (L-1, L-2, L-1&2, OFF)	Black Nylon

FRONT MOUNTED ROTARY SWITCHS

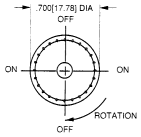

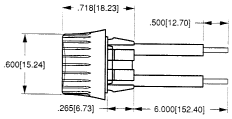

Mounting Hole: 0.500”

SPECIFICATIONS:

Current Rating:	3A @ 125V AC, 1.5A @ 250V AC
Initial Contact Resistance:	DC 2.5V-1A, 20 Meg ohm (Min.)
Insulation Resistance:	500V DC 100 Meg ohm (Min.)
Dielectric Strength:	1500V AC for 1 minute
Contact Material:	Brass - Bright Nickel Plate
Terminal Material:	6” 18 AWG 105 C° Wire
Terminal Type:	Stripped Wire Leads

Part No.	Replaces	Type	Action			Actuator
30-9162	9162	SPST	ON	-	OFF	Black Plastic Knob
30-19163	-	SPST	ON	-	OFF	White Plastic Knb

PULL CHAIN SWITCH
(Two Circuit)

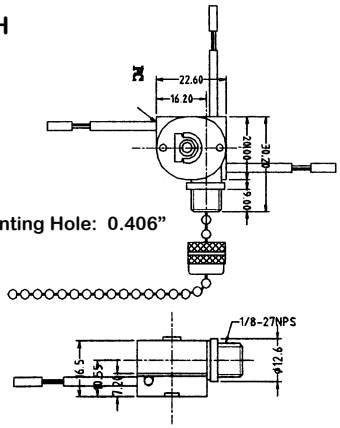

Mounting Hole: 0.406”

SPECIFICATIONS:

Current Rating:	6A @ 125V AC, 3A @ 250V AC
Initial Contact Resistance:	DC 2.5V-1A, 20 Meg ohm (Min.)
Insulation Resistance:	500V DC 100 Meg ohm (Min.)
Dielectric Strength:	1500V AC for 1 minute
Contact Material:	Brass - Bright Nickel Plate
Terminal Material:	6” 18 AWG 105 C° Wire
Terminal Type:	Stripped Wire Leads

Part No.	Replaces	Type	Action	Actuator
30-9158	9158	Two Circuit	3-Way (L-1, L-2, L-1&2, OFF)	Pull Chain

ROTARY CANOPY SWITCH
(Two Circuit)

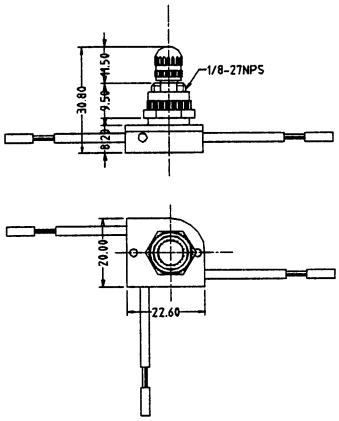

Mounting Hole: 0.400”

SPECIFICATIONS:

Current Rating:	6A @ 125V AC, 3A @ 250V AC
Initial Contact Resistance:	DC 2.5V-1A, 20 Meg ohm (Min.)
Insulation Resistance:	500V DC 100 Meg ohm (Min.)
Dielectric Strength:	1500V AC for 1 minute
Contact Material:	Brass - Bright Nickel Plate
Terminal Material:	6” 18 AWG 105 C° Wire
Terminal Type:	Stripped Wire Leads

Part No.	Replaces	Type	Action	Actuator
30-9160	9160	Two Circuit	3-Way (L-1, L-2, L-1&2, OFF)	Knurled Metal